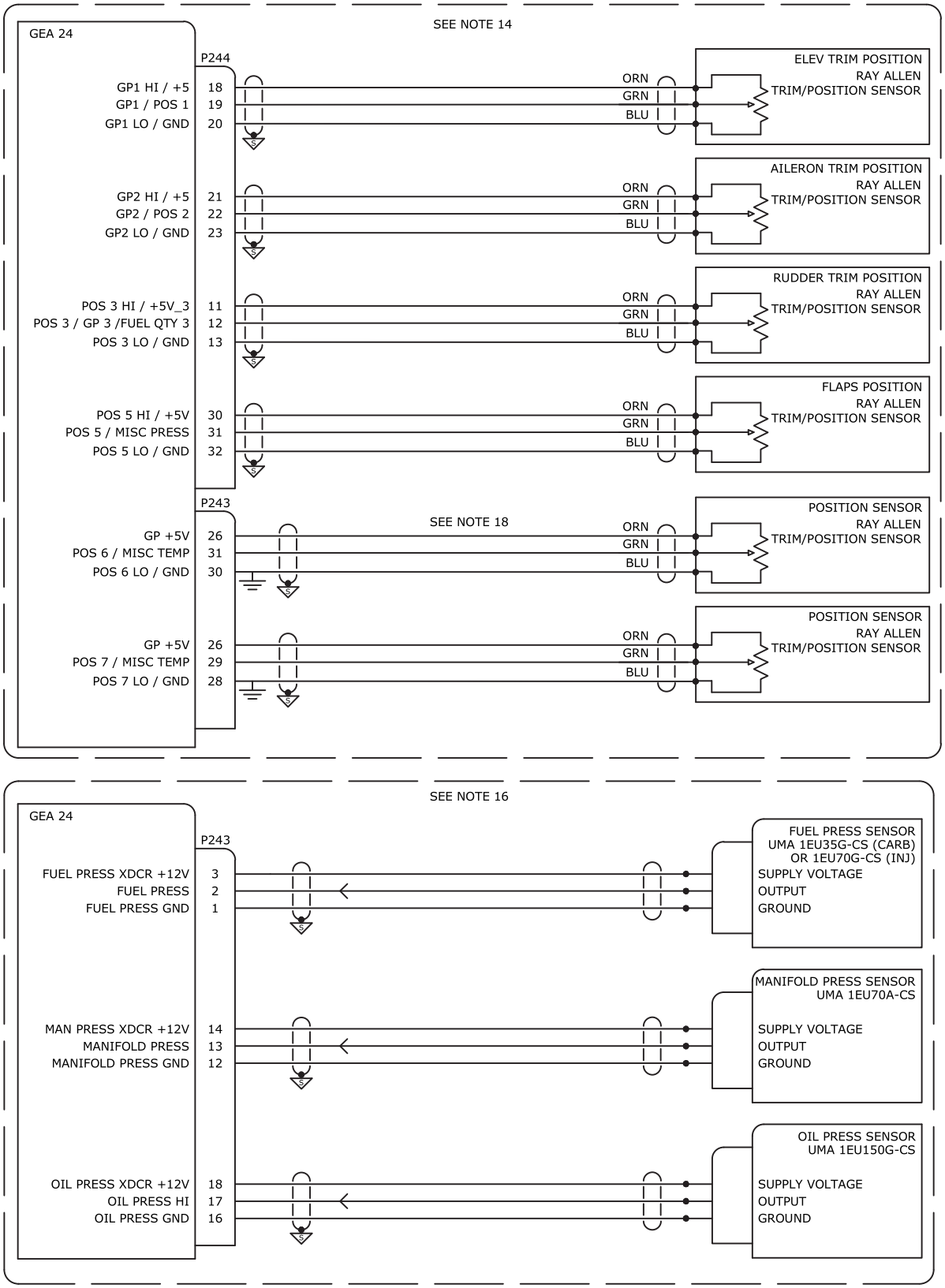

Figure 30-2.3 Flaps/Trim and UMA Pressure Transducer Examples (w/GEA 24)